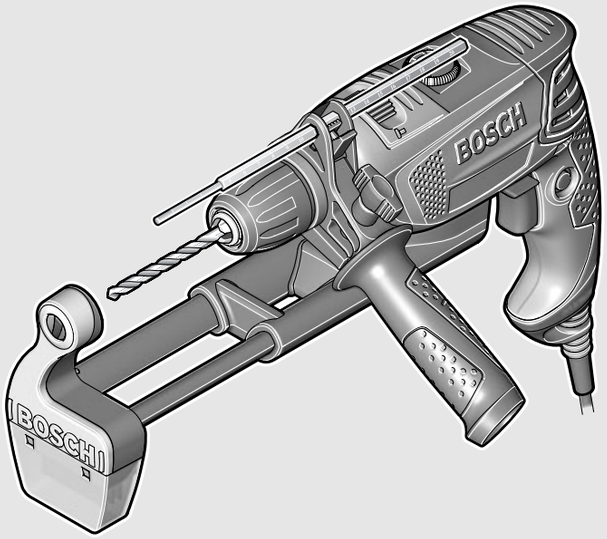

Robert Bosch GmbH
Power Tools Division
70745 Leinfelden-Echterdingen
Germany

www.bosch-pt.com

2 609 004 159 (2009.09) O / 141 **WEU**

2 609 004 159

PSB

650 RE | 6500 RE | 650 RA | 750 RCE | 750 RCA

BOSCH

de Originalbetriebsanleitung
en Original instructions
fr Notice originale
es Manual original
pt Manual original
it Istruzioni originali
nl Oorspronkelijke gebruiksaanwijzing
da Original brugsanvisning
sv Bruksanvisning i original
no Original driftsinstruks
fi Alkuperäiset ohjeet
el Πρωτότυπο οδηγιών χρήσης
tr Orijinal işletme talimatı

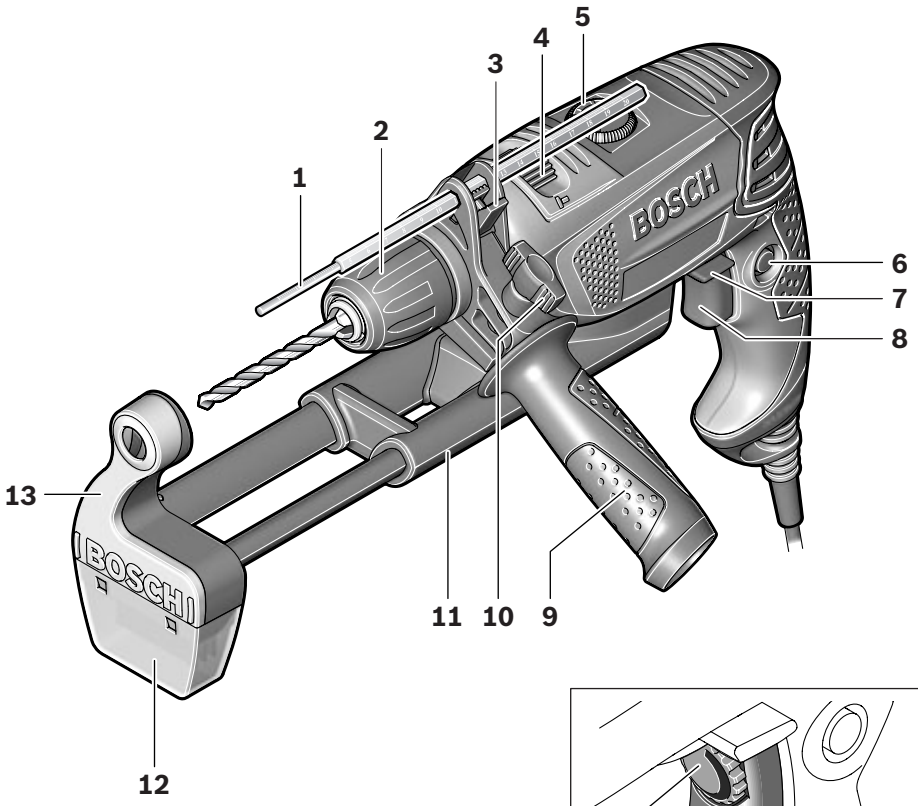

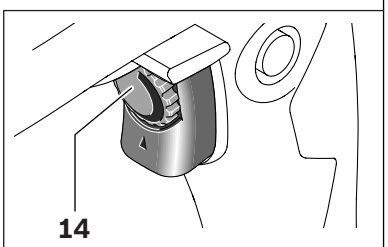

PSB 750 RCA

PSB 650 RE
PSB 6500 RE
PSB 650 RA

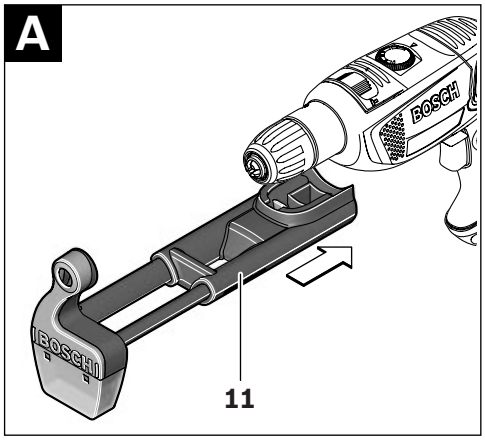

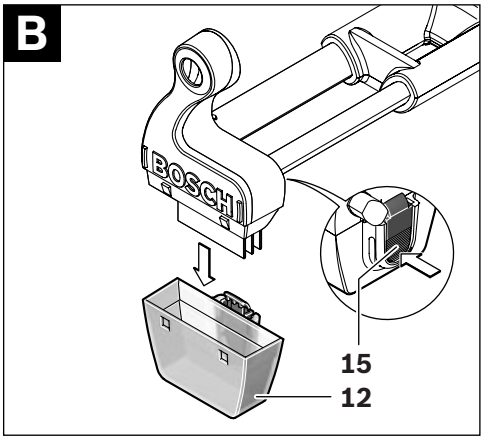

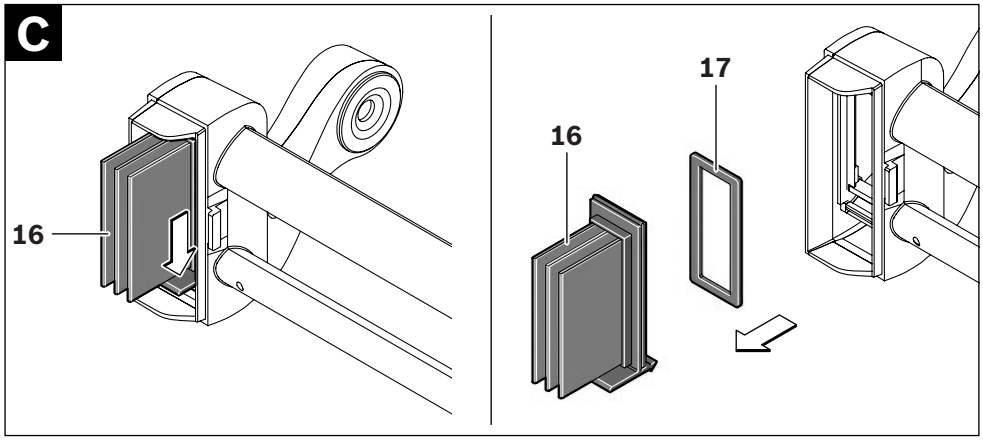

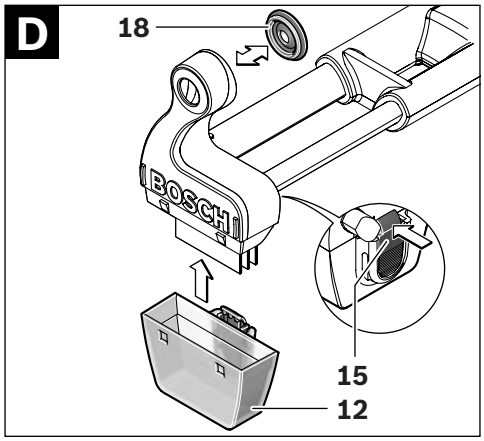

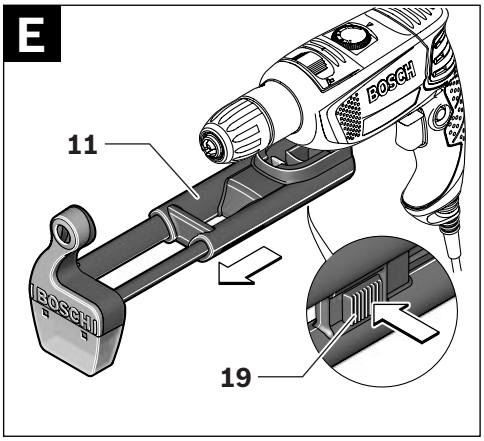

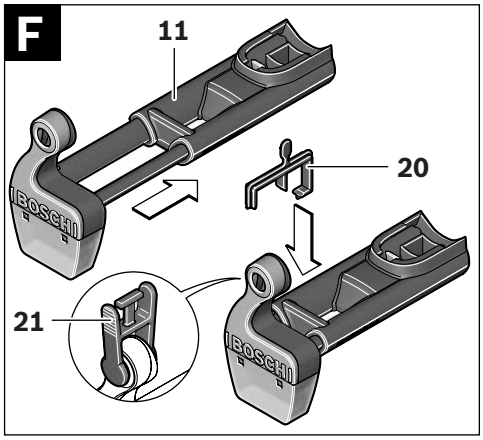

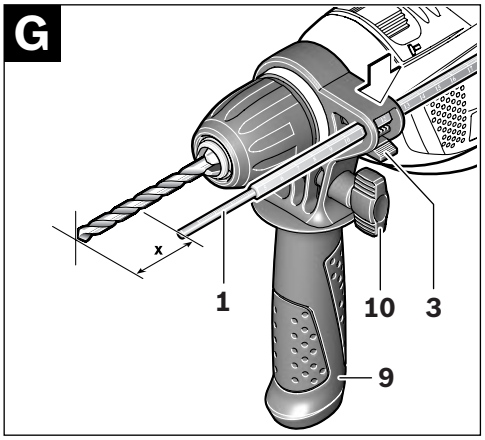

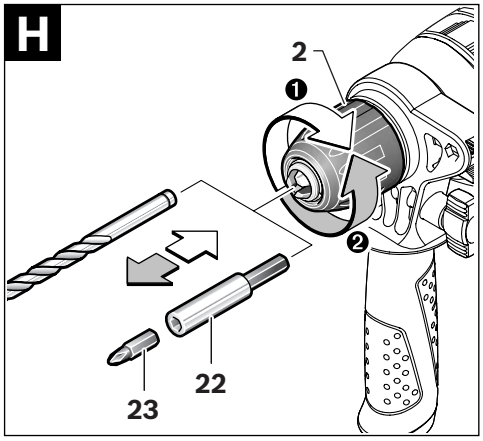

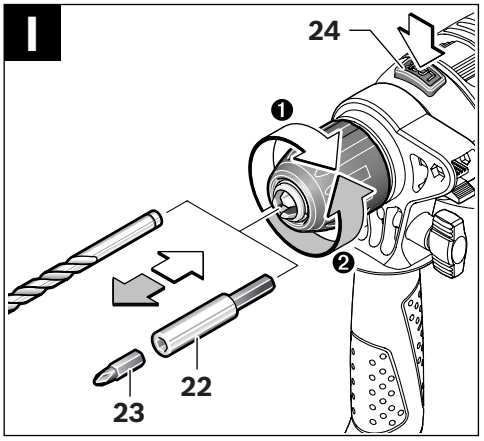

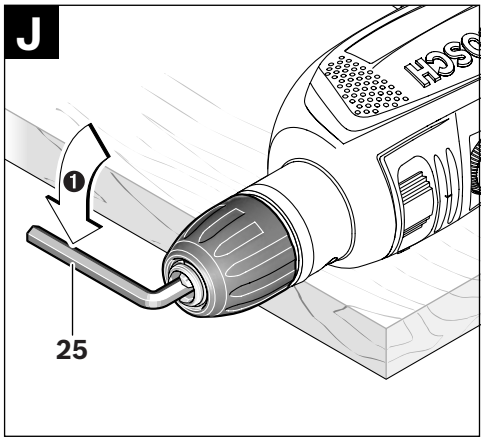

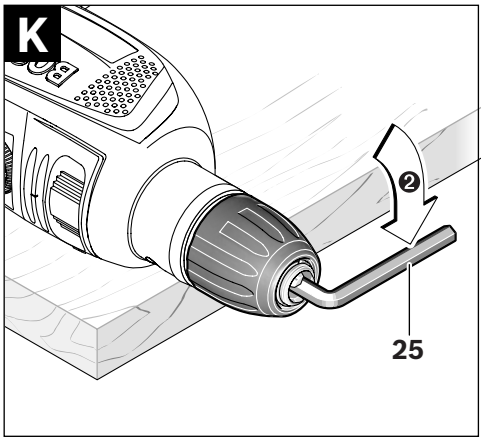

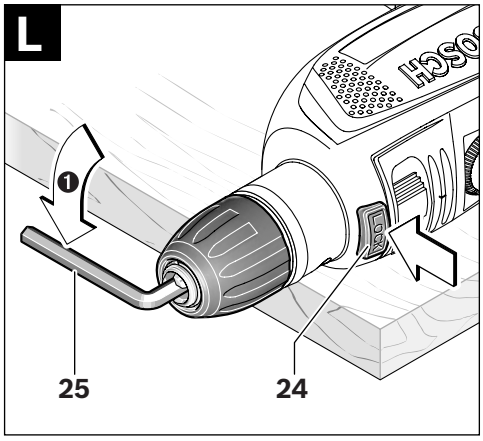

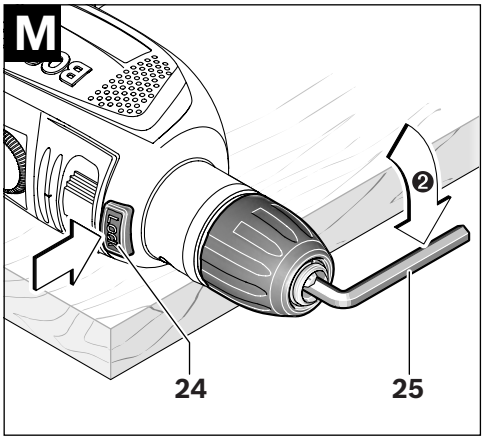

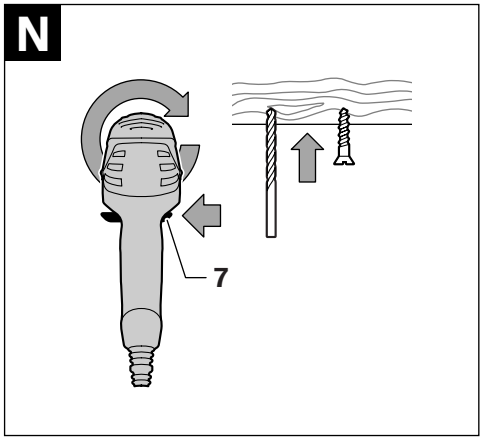

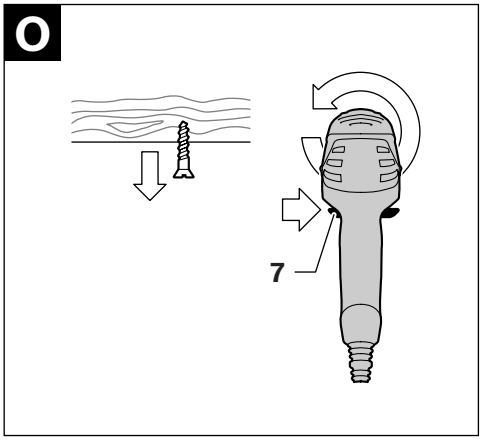

Safety Notes

General Power Tool Safety Warnings

WARNING **Read all safety warnings and all instructions.** Failure to follow the warnings and instructions may result in electric shock, fire and/or serious injury.

Save all warnings and instructions for future reference.

The term “power tool” in the warnings refers to your mains-operated (corded) power tool or battery-operated (cordless) power tool.

1) Work area safety

a) Keep work area clean and well lit. Cluttered or dark areas invite accidents.

b) Do not operate power tools in explosive atmospheres, such as in the presence of flammable liquids, gases or dust. Power tools create sparks which may ignite the dust or fumes.

c) Keep children and bystanders away while operating a power tool. Distractions can cause you to lose control.

2) Electrical safety

a) Power tool plugs must match the outlet. Never modify the plug in any way. Do not use any adapter plugs with earthed (grounded) power tools. Unmodified plugs and matching outlets will reduce risk of electric shock.

b) Avoid body contact with earthed or grounded surfaces, such as pipes, radiators, ranges and refrigerators. There is an increased risk of electric shock if your body is earthed or grounded.

c) Do not expose power tools to rain or wet conditions. Water entering a power tool will increase the risk of electric shock.

d) Do not abuse the cord. Never use the cord for carrying, pulling or unplugging the power tool. Keep cord away from heat, oil, sharp edges and moving parts. Damaged or entangled cords increase the risk of electric shock.

e) When operating a power tool outdoors, use an extension cord suitable for outdoor use. Use of a cord suitable for outdoor use reduces the risk of electric shock.

f) If operating a power tool in a damp location is unavoidable, use a residual current device (RCD) protected supply. Use of an RCD reduces the risk of electric shock.

3) Personal safety

a) Stay alert, watch what you are doing and use common sense when operating a power tool. Do not use a power tool while you are tired or under the influence of drugs, alcohol or medication. A moment of inattention while operating power tools may result in serious personal injury.

b) Use personal protective equipment. Always wear eye protection. Protective equipment such as dust mask, non-skid safety shoes, hard hat, or hearing protection used for appropriate conditions will reduce personal injuries.

c) Prevent unintentional starting. Ensure the switch is in the off-position before connecting to power source and/or battery pack, picking up or carrying the tool. Carrying power tools with your finger on the switch or energising power tools that have the switch on invites accidents.

d) Remove any adjusting key or wrench before turning the power tool on. A wrench or a key left attached to a rotating part of the power tool may result in personal injury.

e) Do not overreach. Keep proper footing and balance at all times. This enables better control of the power tool in unexpected situations.

f) Dress properly. Do not wear loose clothing or jewellery. Keep your hair, clothing and gloves away from moving parts. Loose clothes, jewellery or long hair can be caught in moving parts.

g) **If devices are provided for the connection of dust extraction and collection facilities, ensure these are connected and properly used.** Use of dust collection can reduce dust-related hazards.

4) **Power tool use and care**

a) **Do not force the power tool. Use the correct power tool for your application.** The correct power tool will do the job better and safer at the rate for which it was designed.

b) **Do not use the power tool if the switch does not turn it on and off.** Any power tool that cannot be controlled with the switch is dangerous and must be repaired.

c) **Disconnect the plug from the power source and/or the battery pack from the power tool before making any adjustments, changing accessories, or storing power tools.** Such preventive safety measures reduce the risk of starting the power tool accidentally.

d) **Store idle power tools out of the reach of children and do not allow persons unfamiliar with the power tool or these instructions to operate the power tool.** Power tools are dangerous in the hands of untrained users.

e) **Maintain power tools. Check for misalignment or binding of moving parts, breakage of parts and any other condition that may affect the power tool's operation. If damaged, have the power tool repaired before use.** Many accidents are caused by poorly maintained power tools.

f) **Keep cutting tools sharp and clean.** Properly maintained cutting tools with sharp cutting edges are less likely to bind and are easier to control.

g) **Use the power tool, accessories and tool bits etc. in accordance with these instructions, taking into account the working conditions and the work to be performed.** Use of the power tool for operations different from those intended could result in a hazardous situation.

5) **Service**

a) **Have your power tool serviced by a qualified repair person using only identical replacement parts.** This will ensure that the safety of the power tool is maintained.

Safety Warnings for Drills

- **Wear ear protectors when impact drilling.** Exposure to noise can cause hearing loss.
- **Use auxiliary handle(s), if supplied with the tool.** Loss of control can cause personal injury.
- **Hold power tool by insulated gripping surfaces, when performing an operation where the cutting accessory may contact hidden wiring or its own cord.** Cutting accessory contacting a "live" wire may make exposed metal parts of the power tool "live" and could give the operator an electric shock.
- **Use appropriate detectors to determine if utility lines are hidden in the work area or call the local utility company for assistance.** Contact with electric lines can lead to fire and electric shock. Damaging a gas line can lead to explosion. Penetrating a water line causes property damage or may cause an electric shock.
- **Switch off the power tool immediately when the tool insert jams. Be prepared for high reaction torque that can cause kickback.** The tool insert jams when:
  – the power tool is subject to overload or
  – it becomes wedged in the workpiece.
- **When working with the machine, always hold it firmly with both hands and provide for a secure stance.** The power tool is guided more secure with both hands.
- **Secure the workpiece.** A workpiece clamped with clamping devices or in a vice is held more secure than by hand.
- **Keep your workplace clean.** Blends of materials are particularly dangerous. Dust from light alloys can burn or explode.
- **Always wait until the machine has come to a complete stop before placing it down.** The tool insert can jam and lead to loss of control over the power tool.

- **Never use the machine with a damaged cable. Do not touch the damaged cable and pull the mains plug when the cable is damaged while working.** Damaged cables increase the risk of an electric shock.

Products sold in GB only: Your product is fitted with an BS 1363/A approved electric plug with internal fuse (ASTA approved to BS 1362).
If the plug is not suitable for your socket outlets, it should be cut off and an appropriate plug fitted in its place by an authorised customer service agent. The replacement plug should have the same fuse rating as the original plug.
The severed plug must be disposed of to avoid a possible shock hazard and should never be inserted into a mains socket elsewhere.
Products sold in AUS and NZ only: Use a residual current device (RCD) with a rated residual current of 30 mA or less.

Functional Description

Read all safety warnings and all instructions. Failure to follow the warnings and instructions may result in electric shock, fire and/or serious injury.

Intended Use

The machine is intended for impact drilling in brick, concrete and stone as well as for drilling in wood, metal and plastic. Machines with electronic control and right/left rotation are also suitable for screwdriving and thread-cutting.

Product Features

The numbering of the product features refers to the illustration of the machine on the graphics page.

1 Depth stop*
2 Keyless chuck
3 Button for depth stop adjustment*
4 “Drilling/Impact Drilling” selector switch
5 Thumbwheel for electronic speed preselection (PSB 750 RCE/PSB 750 RCA)
6 Lock-on button for On/Off switch
7 Rotational direction switch
8 On/Off switch
9 Auxiliary handle*
10 Wing bolt for adjustment of auxiliary handle*
11 Extraction device with dust collector*
12 Dust collector*
13 Level indicator of the dust collector
14 Thumbwheel for speed preselection (PSB 650 RE/PSB 6500 RE/PSB 650 RA)
15 Release button for dust collector*
16 Filter element (micro filtersystem)*
17 Rubber gasket for dust collector*
18 Dust protection ring*
19 Release button for extraction device*
20 Clamp for extraction device*
21 Locking latch for dust collector*
22 Universal bit holder*
23 Screwdriver bit*
24 Spindle lock button (PSB 650 RE/PSB 6500 RE/PSB 650 RA)
25 Allen key**

***Accessories shown or described are not part of the standard delivery scope of the product. A complete overview of accessories can be found in our accessories program.**

****Commercially available (not included in the delivery scope)**

Technical Data

Impact Drill		PSB 650 RE PSB 6500 RE	PSB 650 RA	PSB 750 RCE	PSB 750 RCA
Article number		3 603 A28 0..	3 603 A28 0..	3 603 A28 5..	3 603 A28 5..
Rated power input	W	650	650	750	750
Output power	W	338	338	400	400
No-load speed	min^{-1}	50 – 3000	50 – 3000	50 – 3000	50 – 3000
Rated speed	min^{-1}	1690	1690	1750	1750
Impact rate	min^{-1}	48000	48000	48000	48000
Rated torque	Nm	1.7	1.7	1.9	1.9
Torque at max. output power	Nm	9	9	10	10
Speed preselection		●	●	●	●
Constant electronic control		–	–	●	●
Right/left rotation		●	●	●	●
Dust extraction		–	●	–	●
Fully automatic spindle locking (Auto-lock)		–	–	●	●
Spindle collar dia.	mm	43	43	43	43
Max. drilling dia. – Concrete – Steel – Wood – with extraction device mounted	 mm mm mm mm	 14 12 30 13	 14 12 30 13	 14 12 30 13	 14 12 30 13
Chuck clamping range	mm	1.5 – 13	1.5 – 13	1.5 – 13	1.5 – 13
Weight according to EPTA-Procedure 01/2003 – with extraction device – without extraction device	 kg kg	 – 1.7	 1.9 –	 – 1.8	 2.0 –
Protection class		⧈/II	⧈/II	⧈/II	⧈/II

The values given are valid for nominal voltages [U] of 230/240 V. For lower voltage and models for specific countries, these values can vary.

Please observe the article number on the type plate of your machine. The trade names of the individual machines may vary.

Noise/Vibration Information

		PSB 650 RE PSB 6500 RE PSB 650 RA	PSB 750 RCE PSB 750 RCA
Measured values determined according to EN 60745.			
Typically the A-weighted noise levels of the product are:			
Sound pressure level	dB(A)	97	100
Sound power level	dB(A)	108	111
Uncertainty K=	dB	3	3
Wear hearing protection!			
Vibration total values (triax vector sum) determined according to EN 60745:			
Drilling into metal:			
Vibration emission value a_h	m/s^2	4.5	5.0
Uncertainty K=	m/s^2	1.5	1.5
Impact drilling into concrete:			
Vibration emission value a_h	m/s^2	35	35
Uncertainty K=	m/s^2	3.5	4.5
Screwdriving without impact:			
Vibration emission value a_h	m/s^2	<2.5	<2.5
Uncertainty K=	m/s^2	1.5	1.5
Tapping:			
Vibration emission value a_h	m/s^2	<2.5	<2.5
Uncertainty K=	m/s^2	1.5	1.5

The vibration emission level given in this information sheet has been measured in accordance with a standardised test given in EN 60745 and may be used to compare one tool with another. It may be used for a preliminary assessment of exposure.
The declared vibration emission level represents the main applications of the tool. However if the tool is used for different applications, with different accessories or poorly maintained, the vibration emission may differ. This may significantly increase the exposure level over the total working period.
An estimation of the level of exposure to vibration should also take into account the times when the tool is switched off or when it is running but not actually doing the job. This may significantly reduce the exposure level over the total working period.
Identify additional safety measures to protect the operator from the effects of vibration such as: maintain the tool and the accessories, keep the hands warm, organisation of work patterns.

Declaration of Conformity CE

We declare under our sole responsibility that the product described under “Technical Data” is in conformity with the following standards or standardization documents: EN 60745 according to the provisions of the directives 2004/108/EC, 98/37/EC (until 28 Dec 2009), 2006/42/EC (from 29 Dec 2009).

Technical file at:
Robert Bosch GmbH, PT/ESC,
D-70745 Leinfelden-Echterdingen

Dr. Egbert Schneider
Senior Vice President
Engineering

Dr. Eckerhard Strötgen
Head of Product
Certification

Robert Bosch GmbH, Power Tools Division
D-70745 Leinfelden-Echterdingen
25.08.2009

Assembly

- **Before any work on the machine itself, pull the mains plug.**

Dust extraction (PSB 650 RA/ PSB 750 RCA) (see figures A–F)

- Dusts from materials such as lead-containing coatings, some wood types, minerals and metal can be harmful to one's health. Touching or breathing-in the dusts can cause allergic reactions and/or lead to respiratory infections of the user or bystanders.
  Certain dusts, such as oak or beech dust, are considered as carcinogenic, especially in connection with wood-treatment additives (chromate, wood preservative). Materials containing asbestos may only be worked by specialists.
  - Use dust extraction whenever possible.
  - Provide for good ventilation of the working place.
  - It is recommended to wear a P2 filter-class respirator.

  Observe the relevant regulations in your country for the materials to be worked.
- **Use the dust/chip extraction only when working concrete, brick and brickwork.** Wood or plastic chips can easily lead to clogging.
- **WARNING Fire hazard! Do not work metallic materials with the extraction device mounted.** Hot metal chips can ignite parts of the extraction device.

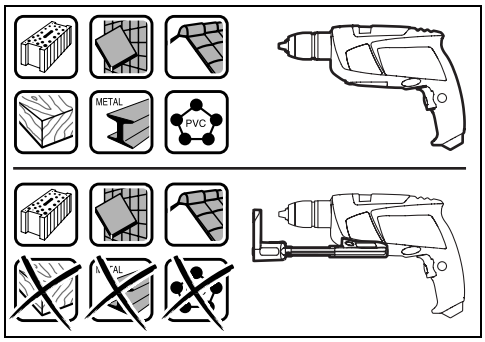

To achieve optimum extraction results, please observe the following notes:

- Pay attention that the extraction device faces flush against the workpiece or the wall. This also makes drilling at a right angle easier.
- When using the extraction device, always work with the maximum speed.
- After reaching the desired drilling depth, pull the drill bit out of the drill hole first and then switch off the impact drill.
- Use the extraction device only with the filter element **16** mounted, as otherwise dust/chips could access the interior of the power tool and cause damage.
- Check the condition of the filter element **16** regularly. Replace a damaged filter element immediately.
- The dust protection ring **18** can wear, especially when working with large drill-bit diameters. Replace the dust protection ring when worn/damaged.

Mounting the Extraction Device (see figure A)

Guide the extraction device **11** from the front toward the bottom side of the impact drill. Pay attention that the extraction device **11** faces flush against the casing and that it is locked.

Cleaning the Extraction Device (see figures B–D)

The dust collector **12** is sufficient for approx. 10 drillings with a drilling diameter of 10 mm.

When the extraction force diminishes or when the level indicator **13** is full, the dust collector **12** must be emptied. For this, press on the riffled surface of the release button **15** and take off the dust collector **12**.

Empty and clean the dust collector **12**. Clean the filter element **16** by gently striking or tapping against it.

Check the filter element **16** for damage and replace it as required.

Press on the holder of the filter element **16** and pull it out. Replace the filter element **16** including the holder. When placing on the holder again, make sure that the rubber gasket **17** is inserted.

Reattach the dust collector **12** again and lock it by pressing against the smooth surface of the release button **15**.

Removing the Extraction Device (see figure E)

For disassembly of the extraction device **11**, press release button **19** and pull off the extraction device **11** toward the front.

Stowing the Extraction Device (see figure F)

For stowing the extraction device **11** in the case, remove the extraction device **11**, slide it together and attach clamp **20**.

Attach the locking latch **21** or empty the dust collector **12** before placing down the extraction device.

Auxiliary Handle

- **Operate your machine only with the auxiliary handle 9.**

The auxiliary handle **9** can be set to any position for a secure and low-fatigue working posture.

Turn the wing bolt for adjustment of the auxiliary handle **10** in anticlockwise direction and set the auxiliary handle **9** to the required position. Then tighten the wing bolt **10** again in clockwise direction.

Adjusting the Drilling Depth (see figure G)

The required drilling depth **X** can be set with the depth stop **1**.

Press the button for the depth stop adjustment **3** and insert the depth stop into the auxiliary handle **9**.

The knurled surface of the depth stop **1** must face downward.

Pull out the depth stop until the distance between the tip of the drill bit and the tip of the depth stop correspond with the desired drilling depth **X**.

Changing the Tool

Keyless Chuck (PSB 750 RCE/PSB 750 RCA) (see figure H)

The drill spindle is locked when the On/Off switch **8** is not pressed. This makes quick, convenient and easy changing of the tool in the drill chuck possible.

Open the keyless chuck **2** by turning in rotation direction ❶, until the tool can be inserted. Insert the tool.

Firmly tighten the collar of the keyless chuck **2** by hand in rotation direction ❷ until the locking action (“click”) is no longer heard. This automatically locks the chuck.

The locking is released again to remove the tool when the collar is turned in the opposite direction.

Keyless Chuck (PSB 650 RE/PSB 6500 RE/ PSB 650 RA) (see figure I)

- **Press the spindle lock button 24 only when the machine is at a standstill.**

The drill spindle is locked by pressing the spindle lock button **24**. This makes quick and easy changing of the tool in the drill chuck possible.

Open the keyless chuck **2** by turning in rotation direction ❶, until the tool can be inserted. Insert the tool.

Firmly tighten the collar of the keyless chuck **2** by hand in rotation direction ❷ until the locking action (“click”) is no longer heard. This automatically locks the chuck.

The locking is released again to remove the tool when the collar is turned in the opposite direction.

Screwdriver Tools

When working with screwdriver bits **23**, a universal bit holder **22** should always be used. Use only screwdriver bits that fit the screw head.

For driving screws, always position the “Drilling/Impact Drilling” selector switch **4** to the “Drilling” symbol.

Replacing the Drill Chuck (PSB 750 RCE/PSB 750 RCA)

Removing the Drill Chuck (see figure J)

Clamp the short end of an Allen key **25** into the keyless chuck **2**.

Place the machine on a stable surface, e. g. a workbench. Hold the machine firmly and loosen the keyless chuck **2** by turning the Allen key **25** in rotation direction ❶. Loosen a tight seated keyless chuck by giving the long end of the Allen key **25** a light blow. Remove the Allen key from the keyless chuck and completely unscrew the keyless chuck.

Mounting the Drill Chuck (see figure K)

The keyless chuck is mounted in reverse order.

⚠ **The drill chuck must be tightened with a tightening torque of approx. 25–35 Nm.**

Replacing the Drill Chuck (PSB 650 RE/ PSB 6500 RE/PSB 650 RA)

Removing the Drill Chuck (see figure L)

Clamp the short end of an Allen key **25** into the keyless chuck **2**.

Place the machine on a firm surface, e. g. a workbench. Hold the machine firmly, press the spindle lock button **24** and loosen the keyless chuck **2** by turning the Allen key **25** in rotation direction ❶. Loosen a tight keyless chuck by giving the long end of the Allen key **25** a light blow. Remove the Allen key from the keyless chuck and completely unscrew the keyless chuck.

Mounting the Drill Chuck (see figure M)

The keyless chuck is mounted in reverse order.

⚠ **The drill chuck must be tightened with a tightening torque of approx. 25–35 Nm.**

Operation

Starting Operation

▶ **Observe correct mains voltage! The voltage of the power source must agree with the voltage specified on the nameplate of the machine. Power tools marked with 230 V can also be operated with 220 V.**

Reversing the Rotational Direction (see figures N–O)

The rotational direction switch **7** is used to reverse the rotational direction of the machine. However, this is not possible with the On/Off switch **8** actuated.

Right Rotation: For drilling and driving in screws, push the rotational direction switch **7** left to the stop.

Left Rotation: For loosening and unscrewing screws and nuts, press the rotational direction switch **7** through to the right stop.

Setting the Operating Mode

Drilling and Screwdriving

Set the selector switch **4** to the “Drilling” symbol.

Impact Drilling

Set the selector switch **4** to the “Impact drilling” symbol.

The selector switch **4** engages noticeably and can also be actuated with the machine running.

Switching On and Off

To **start** the machine, press the On/Off switch **8** and keep it pressed.

To lock the **pressed** On/Off switch **8**, press the lock-on button **6**.

To **switch off** the machine, release the On/Off switch **8** or when it is locked with the lock-on button **6**, briefly press the On/Off switch **8** and then release it.

Adjusting the Speed/Impact Frequency

The speed/impact rate of the switched on power tool can be variably adjusted, depending on how far the On/Off switch **8** is pressed.

Light pressure on the On/Off switch **8** results in low speed/impact rate. Further pressure on the switch increases the speed/impact rate.

Preselecting the Speed/Impact Frequency (PSB 650 RE/PSB 6500 RE/PSB 650 RA)

With the thumbwheel for speed preselection **14**, the required speed/impact frequency can be preselected even during operation.

The required speed/impact frequency depends on the material and the working conditions, and can be determined through practical testing.

Electronic Speed Preselection (PSB 750 RCE/PSB 750 RCA)

With the thumbwheel for electronic speed preselection **5**, the required speed/impact frequency can be selected even if the machine is running.

The required speed/impact frequency depends on the material and the working conditions, and can be determined through practical testing.

For working with low speed.

For working with maximum speed.

Working Advice

- **Apply the power tool to the screw/nut only when it is switched off.** Rotating tool inserts can slip off.

After longer periods of working at low speed, allow the machine to cool down by running it for approx. 3 minutes at maximum speed with no load.

Maintenance and Service

Maintenance and Cleaning

- **Before any work on the machine itself, pull the mains plug.**
- **For safe and proper working, always keep the machine and ventilation slots clean.**

If the machine should fail despite the care taken in manufacturing and testing procedures, repair should be carried out by an after-sales service centre for Bosch power tools.

In all correspondence and spare parts order, please always include the 10-digit article number given on the type plate of the machine.

After-sales Service and Customer Assistance

Our after-sales service responds to your questions concerning maintenance and repair of your product as well as spare parts. Exploded views and information on spare parts can also be found under:
www.bosch-pt.com
Our customer service representatives can answer your questions concerning possible applications and adjustment of products and accessories.

Great Britain

Robert Bosch Ltd. (B.S.C.)
P.O. Box 98
Broadwater Park
North Orbital Road
Denham
Uxbridge
UB 9 5HJ
Tel. Service: +44 (0844) 736 0109
Fax: +44 (0844) 736 0146
E-Mail: boschservicecentre@bosch.com

Ireland

Origo Ltd.
Unit 23 Magna Drive
Magna Business Park
City West
Dublin 24
Tel. Service: +353 (01) 4 66 67 00
Fax: +353 (01) 4 66 68 88

Australia, New Zealand and Pacific Islands

Robert Bosch Australia Pty. Ltd.
Power Tools
Locked Bag 66
Clayton South VIC 3169
Customer Contact Center
Inside Australia:
Phone: +61 (01300) 307 044
Fax: +61 (01300) 307 045
Inside New Zealand:
Phone: +64 (0800) 543 353
Fax: +64 (0800) 428 570
Outside AU and NZ:
Phone: +61 (03) 9541 5555
www.bosch.com.au

Republic of South Africa

Customer service
Hotline: +27 (011) 6 51 96 00

Gauteng – BSC Service Centre
35 Roper Street, New Centre
Johannesburg
Tel.: +27 (011) 4 93 93 75
Fax: +27 (011) 4 93 01 26
E-Mail: bsctools@icon.co.za

KZN – BSC Service Centre
Unit E, Almar Centre
143 Crompton Street
Pinetown
Tel.: +27 (031) 7 01 21 20
Fax: +27 (031) 7 01 24 46
E-Mail: bsc.dur@za.bosch.com

Western Cape – BSC Service Centre
Democracy Way, Prosperity Park
Milnerton
Tel.: +27 (021) 5 51 25 77
Fax: +27 (021) 5 51 32 23
E-Mail: bsc@zsd.co.za

Bosch Headquarters
Midrand, Gauteng
Tel.: +27 (011) 6 51 96 00
Fax: +27 (011) 6 51 98 80
E-Mail: rbsa-hq.pts@za.bosch.com

Disposal

The machine, accessories and packaging should be sorted for environmental-friendly recycling.

Only for EC countries:

Do not dispose of power tools into household waste!
According the European Guideline 2002/96/EC for Waste Electrical and Electronic Equipment and its implementation into national right, power tools that are no longer usable must be collected separately and disposed of in an environmentally correct manner.

Subject to change without notice.